ANT12 N78N79

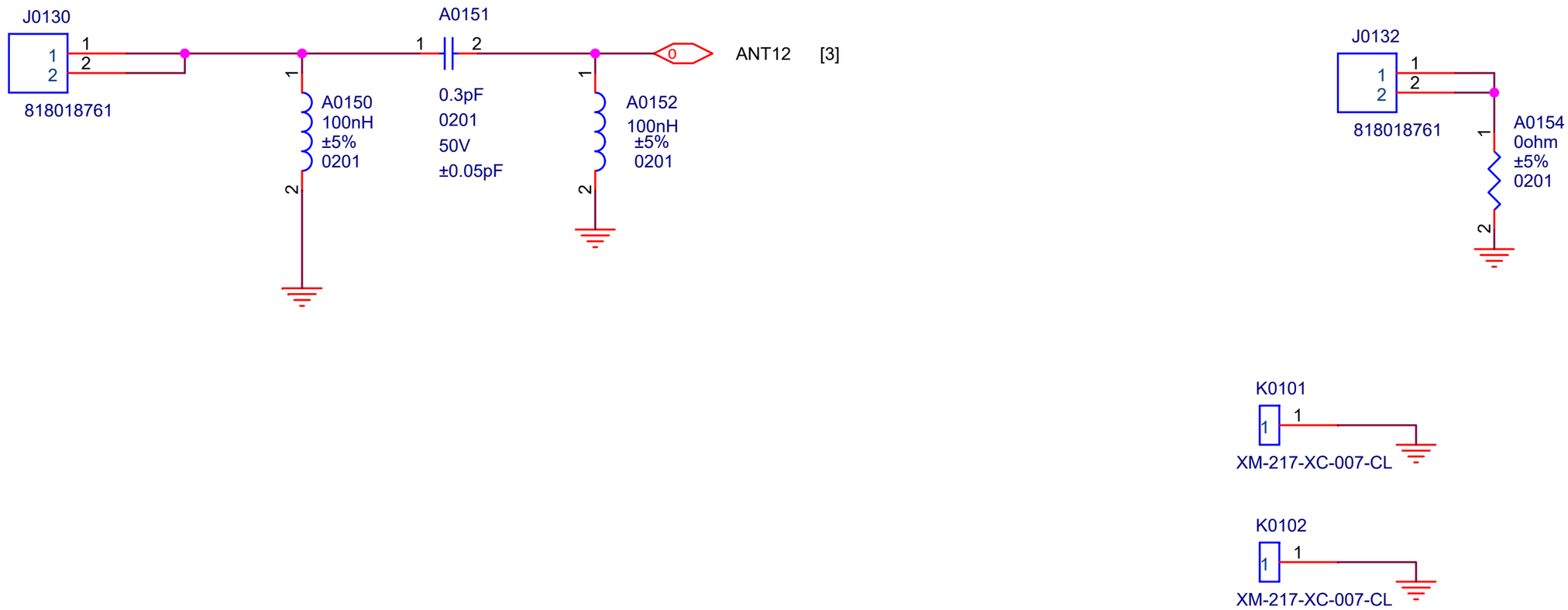

Title	M2_MAIN	
Size A	Document Number ANT1	Rev P0
Date: Tuesday, July 26, 2022	Sheet 01 of 76	

WIFI+GPS

ANT0
GLB
LB_TRX
CN
LB_TRX
N41 NSA PM

ANT1
N77/N78/N79 DRX
LB DRX

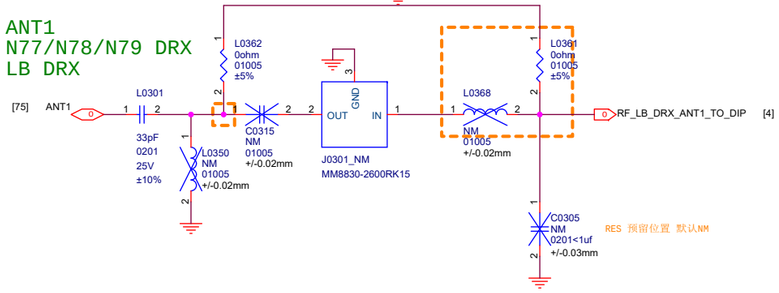

ANT4
GLB
MHB PM
n1/n3/n40/N41/N66 TRX

CN
MHB PM
n1/n3/n40/N41 SA PM
N41 NSA TRX

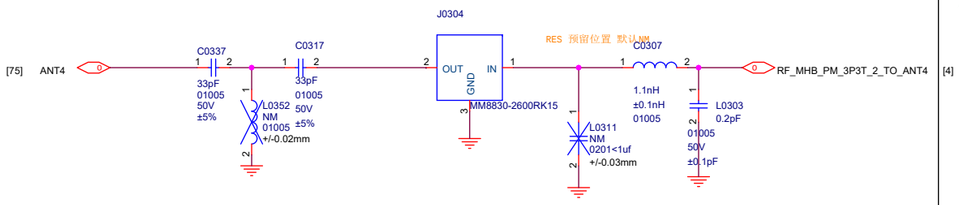

ANT16 GPS L1+WIFI2.4 CHAIN0

ANT17 WIFI 6E CHAIN0

ANT18 WIFI2.4G+WIFI6E CHAIN1

ANT19 GPS L5

ANT3
GLB
MHB TRX
N1/N3 /N40/N41/N66 PM
N78 PM

CN
MHB TRX
N1/N3 /N40/N41 TRX
N78 PM

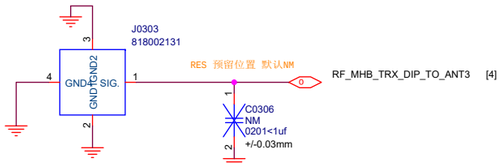

ANT6
GLB
MHB DM
B32 PRX
n1/n3/n40/n41/n66 DRX

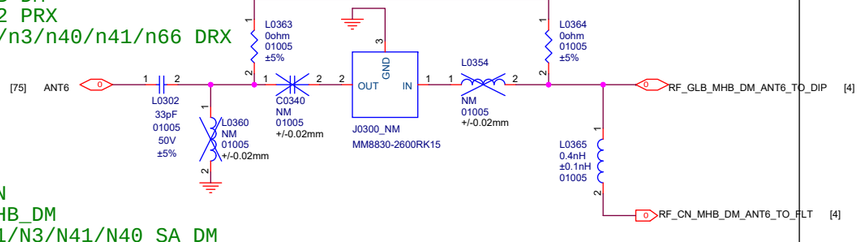

CN
MHB_DM
N1/N3/N41/N40 SA DM
N41 NSA DRX

ANT12 n79 PM

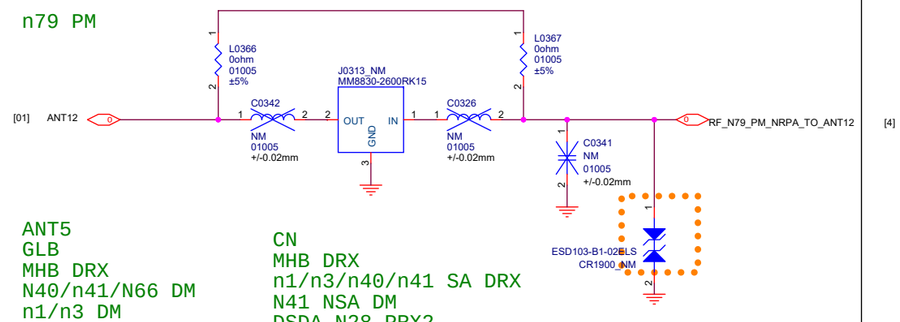

ANT5
GLB
MHB DRX
N40/n41/N66 DM
n1/n3 DM
B20 TRX IN B20+N28

CN
MHB DRX
n1/n3/n40/n41 SA DRX
N41 NSA DM
DSDA N28 PRX2

Title	L2_MAIN	
Size A2	Document Number RF CONN	Rev P0
Date: Monday, August 22, 2022	Sheet 3 of 79	

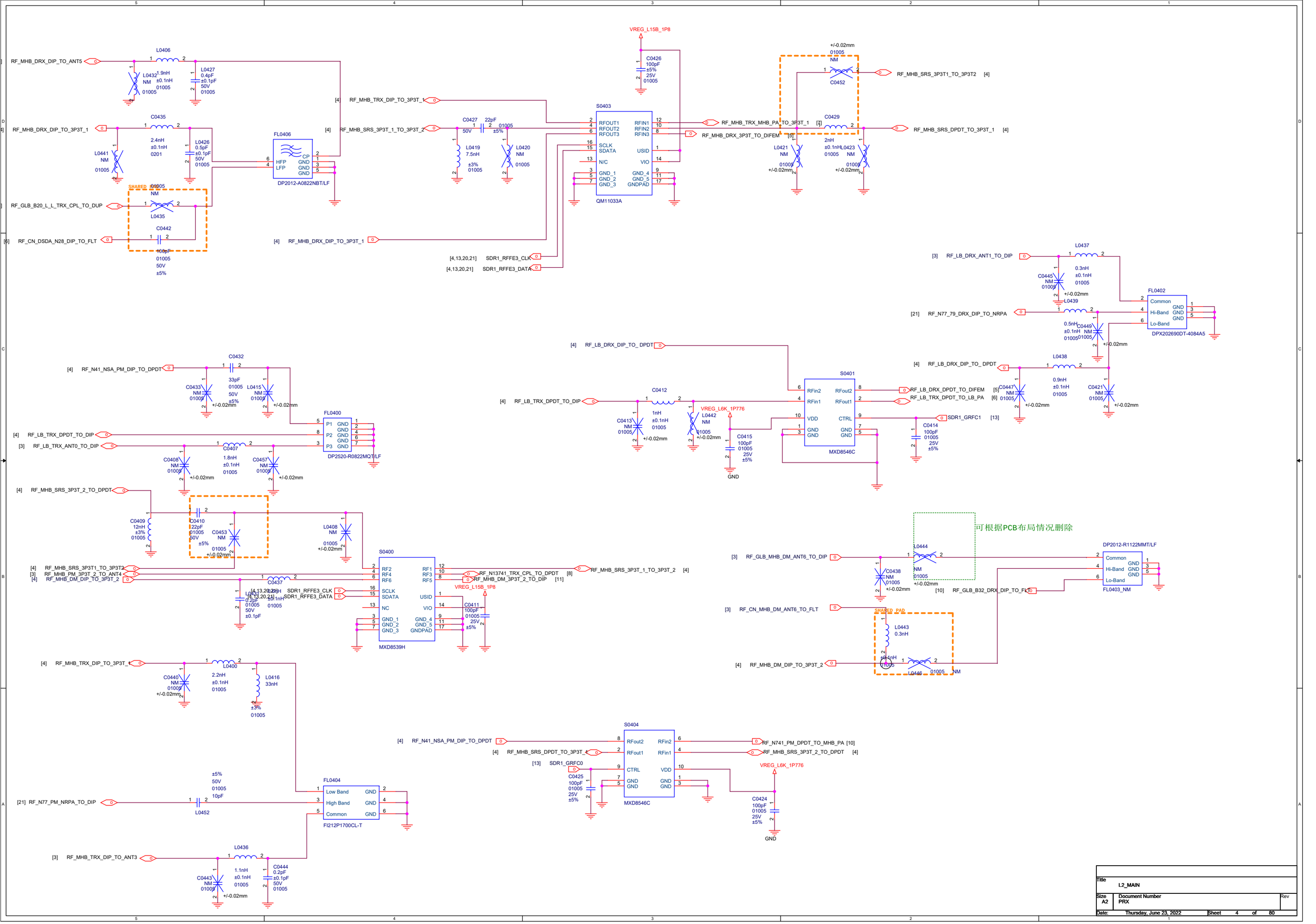

Title	L2_MAIN	
Size A2	Document Number PRX	Rev
Date: Thursday, June 23, 2022	Sheet 4 of 80	

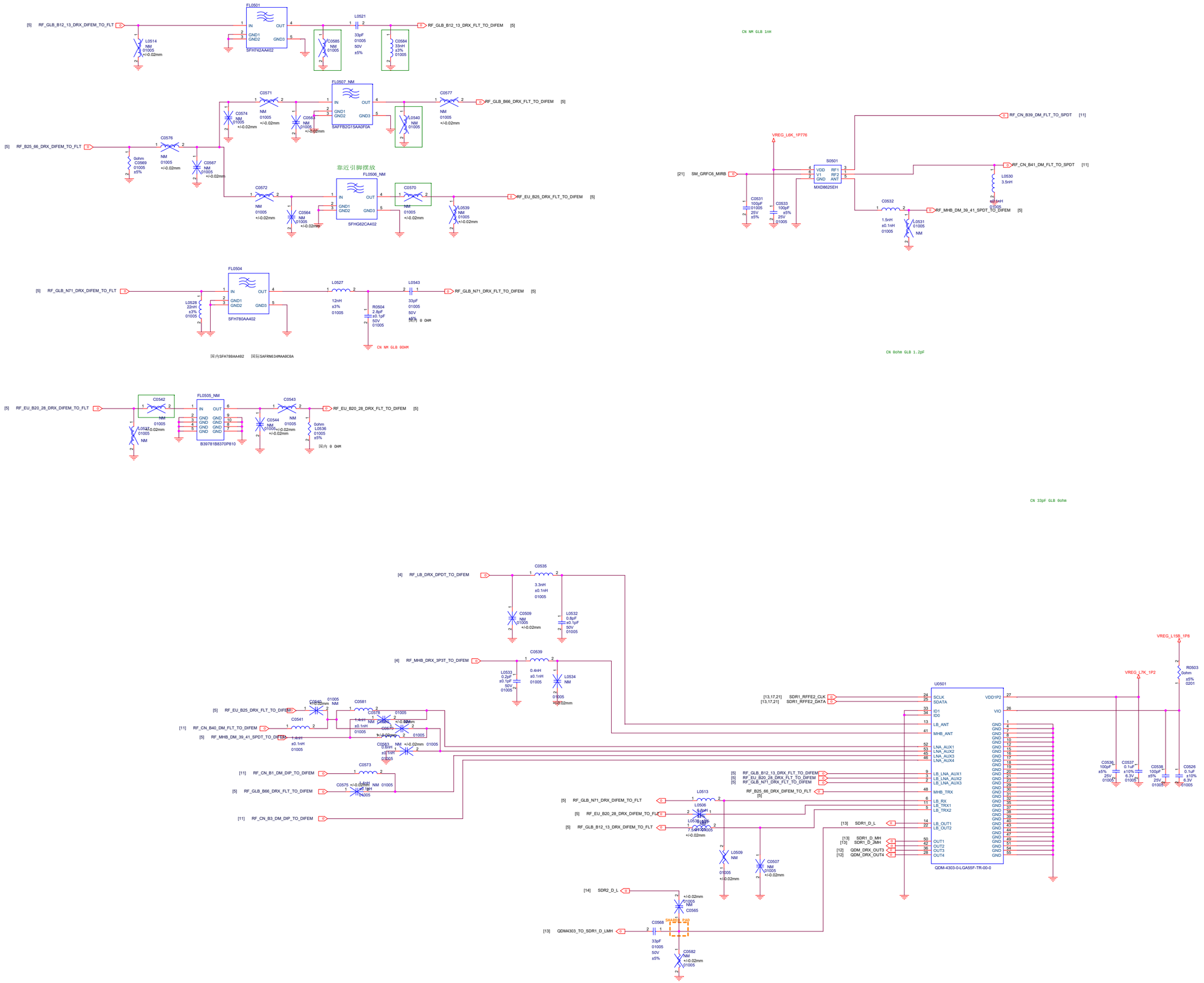

Title	L2_MAIN		
Size A1	Document Number DRX		Rev P0
Date: Monday, August 29, 2022	Sheet 5 of 80		

LB TAS DPDT

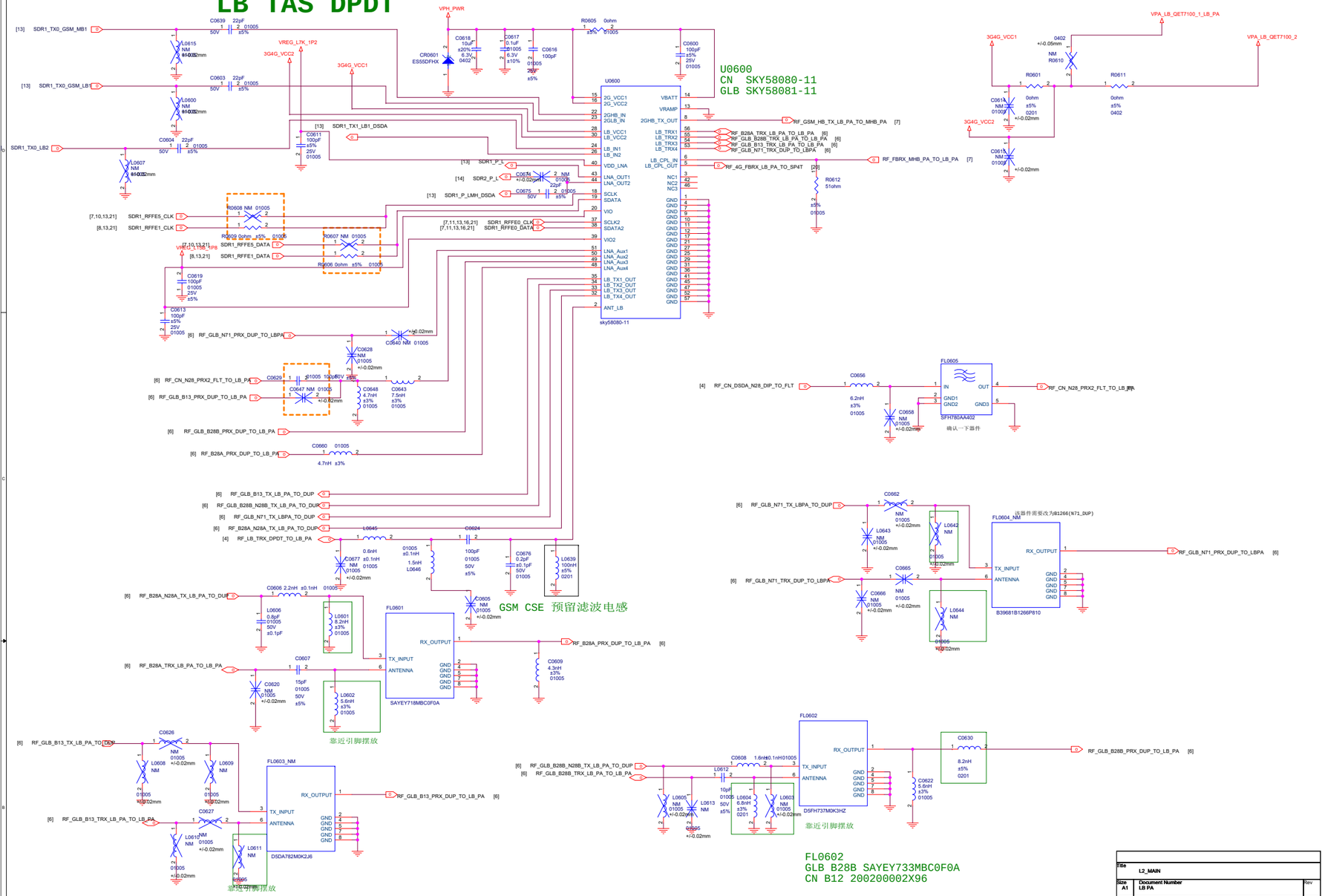

Title	L2_MAIN
Size A1	Document Number LB PA
Rev	
Date: Thursday, June 23, 2022	Sheet 6 of 80

MHB S-PAD

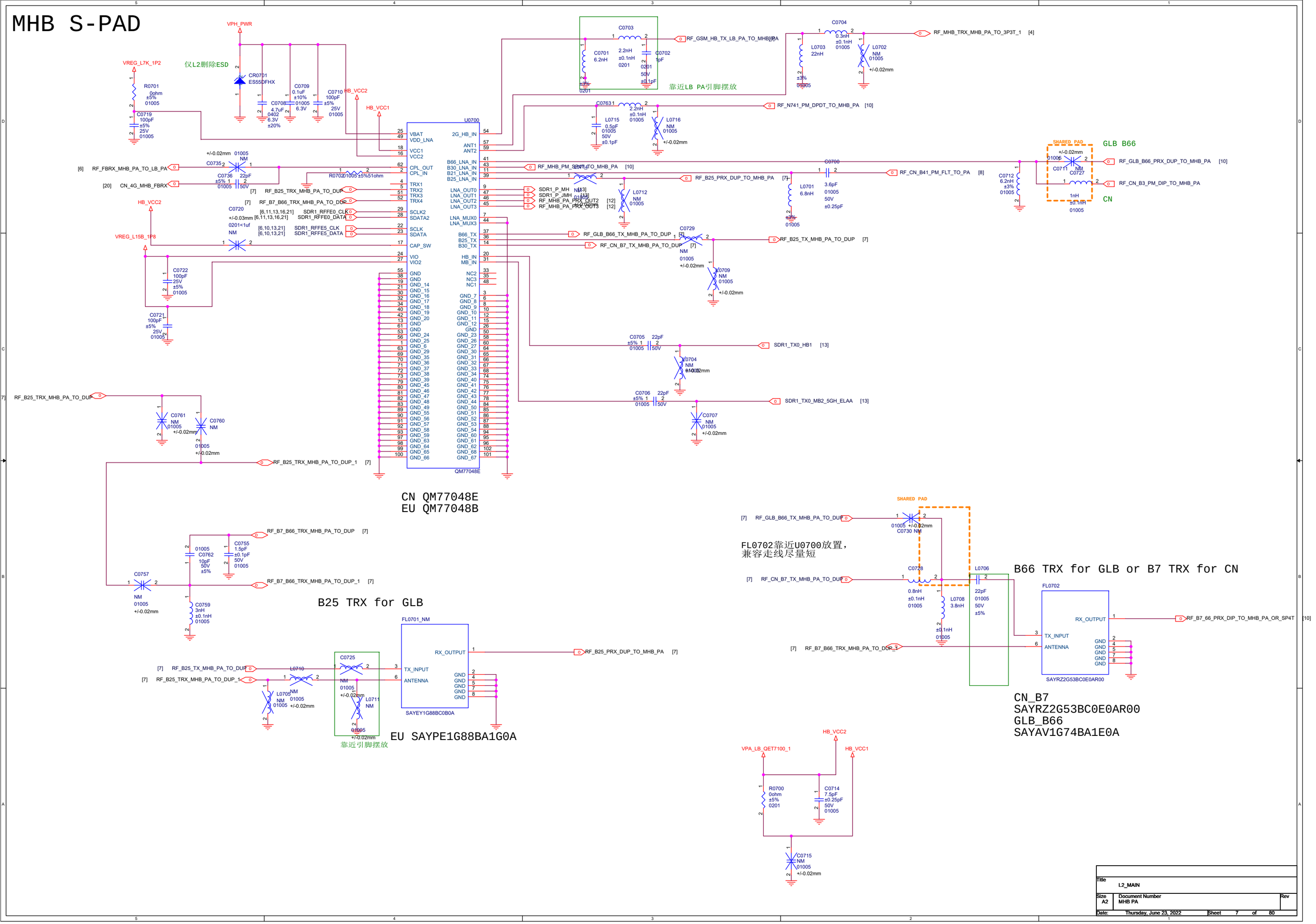

Title	L2_MAIN	
Size A2	Document Number MHB PA	Rev
Date: Thursday, June 23, 2022	Sheet 7 of 80	

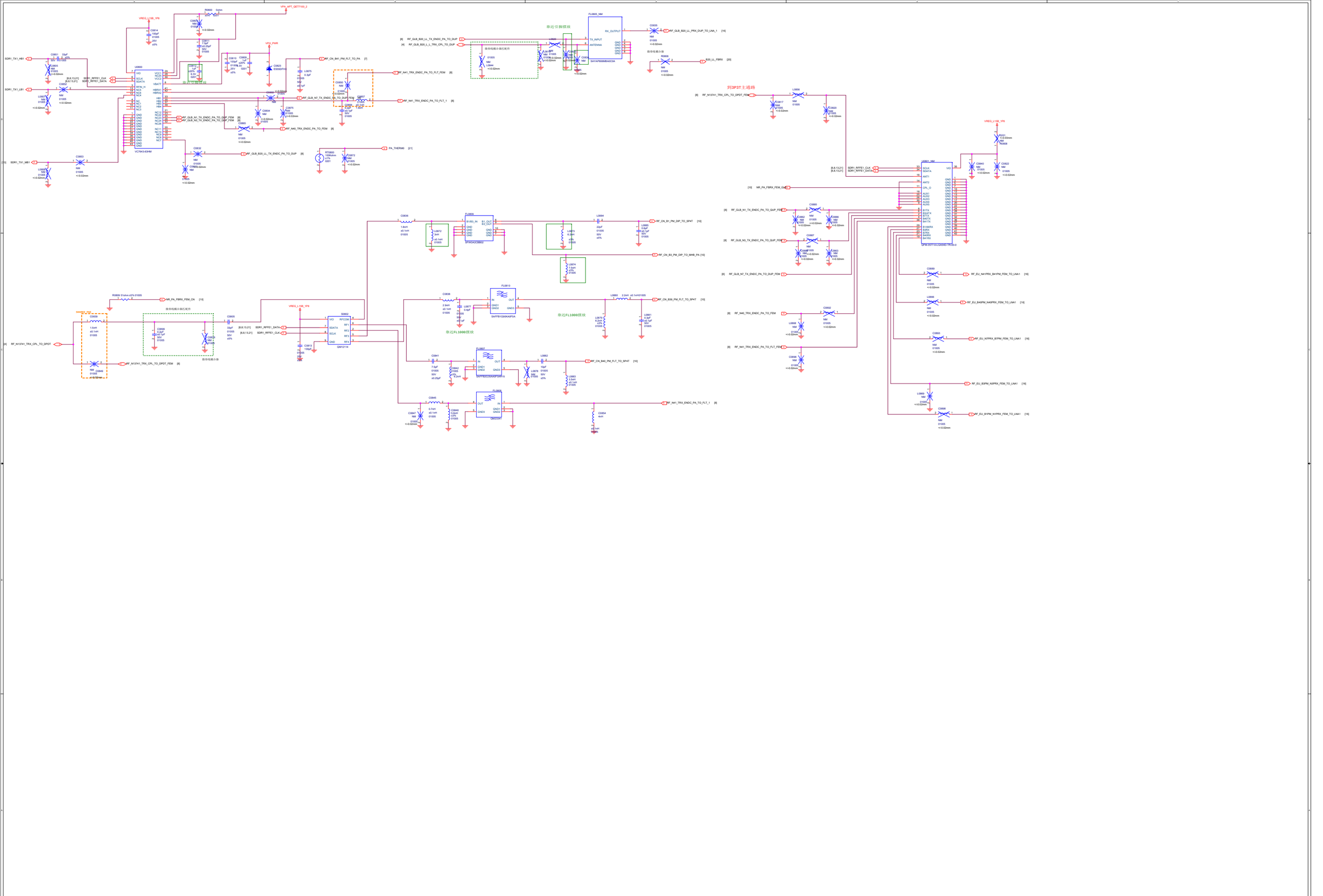
靠近引脚摆放
到3P3T主通路
靠近FL1000摆放
L2_MAIN
ENDC PA
Thursday, June 23, 2022

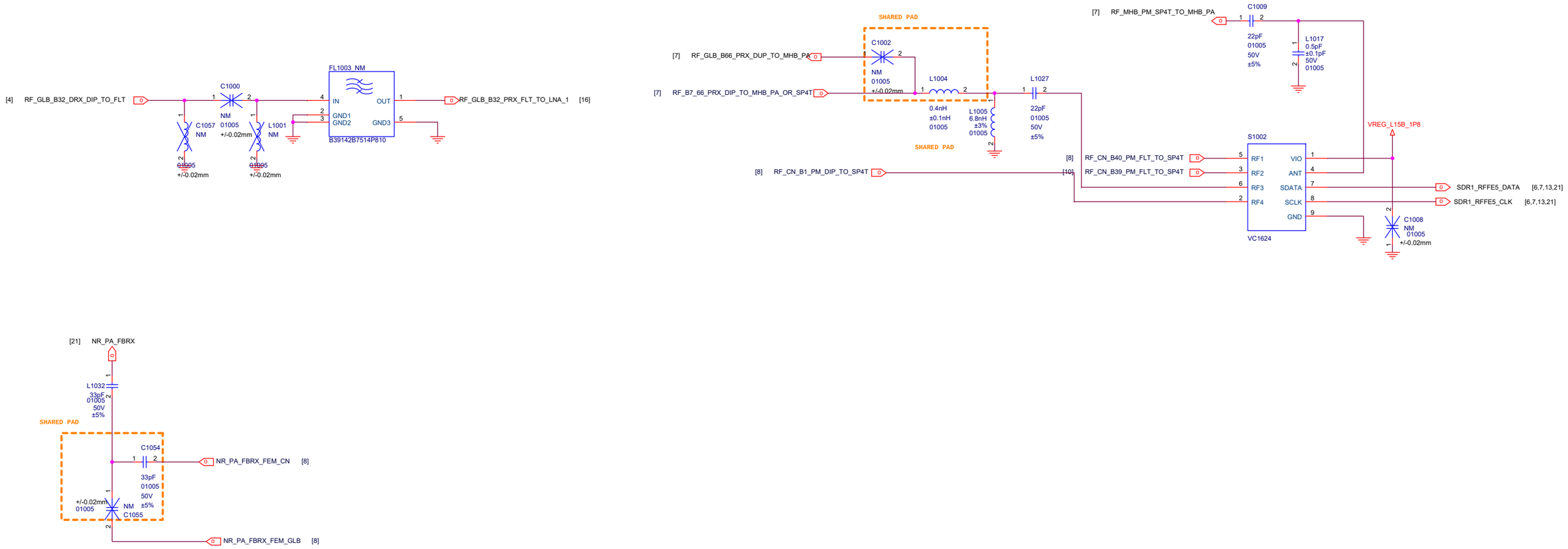

Title	L2_MAIN	
Size A2	Document Number PRX MIMO	Rev P0
Date: Thursday, June 23, 2022	Sheet 10 of 80	

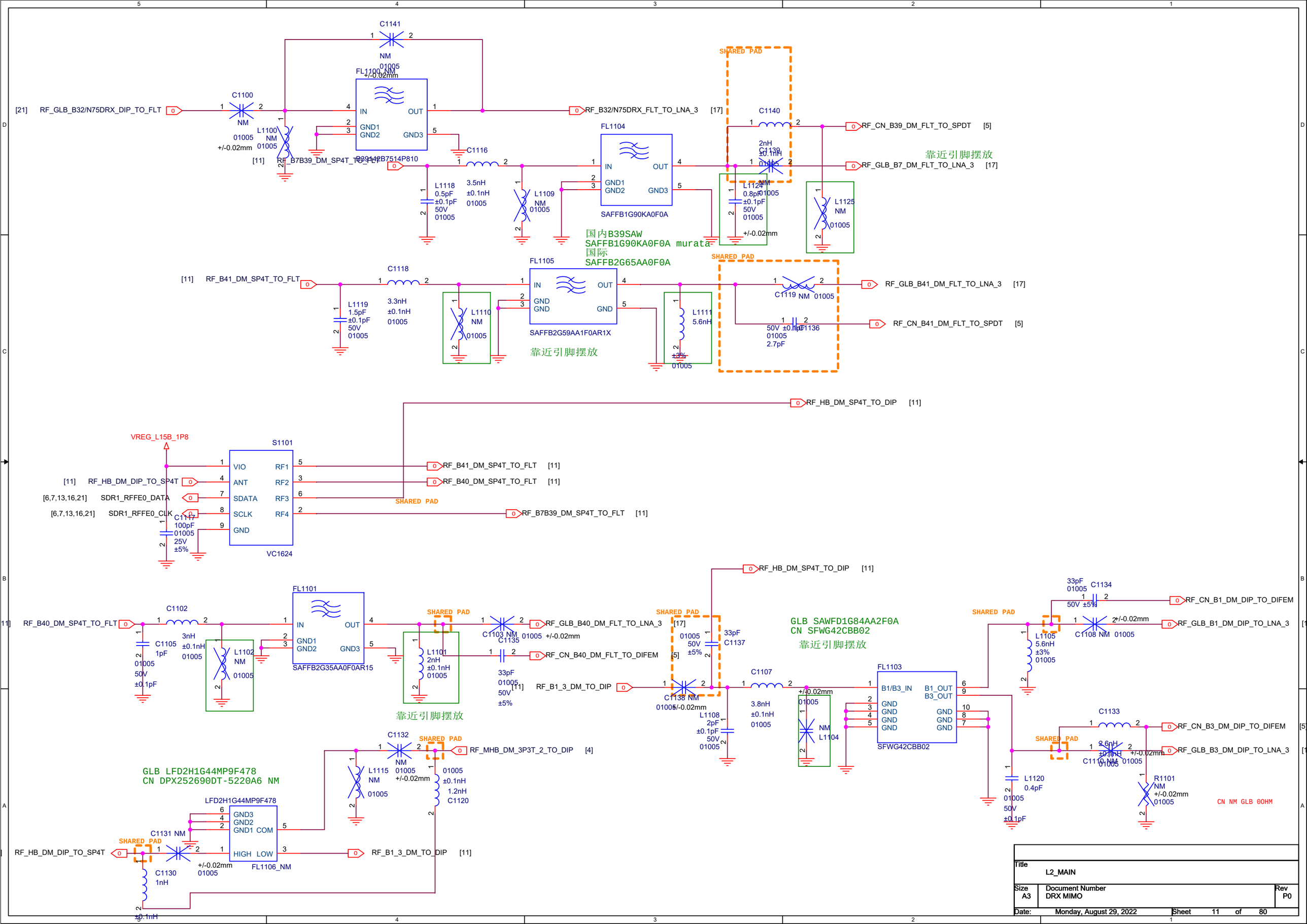

Title	L2_MAIN	
Size A3	Document Number DRX MIMO	Rev P0
Date: Monday, August 29, 2022	Sheet 11 of 80	

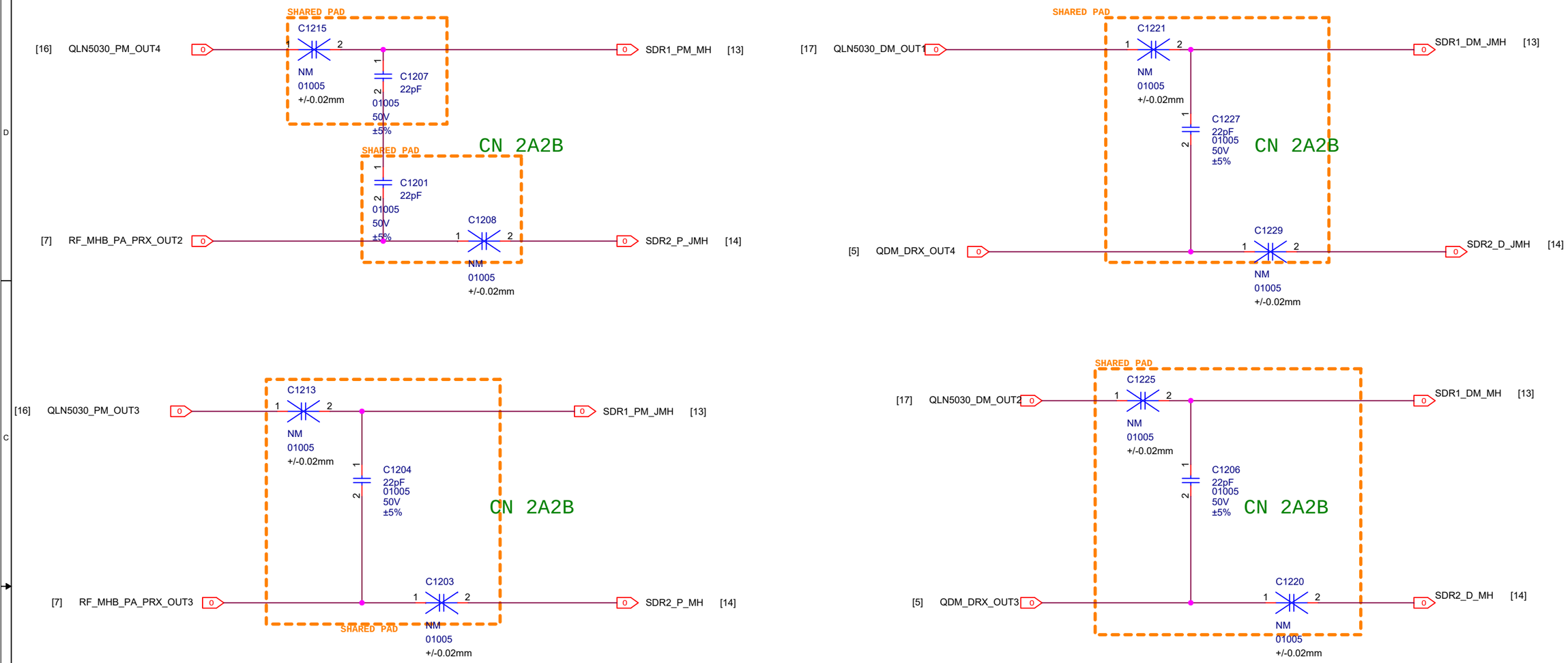

Title	L2_MAIN	
Size A3	Document Number Reserved(for LNA)	Rev
Date: Thursday, June 23, 2022	Sheet 12 of	

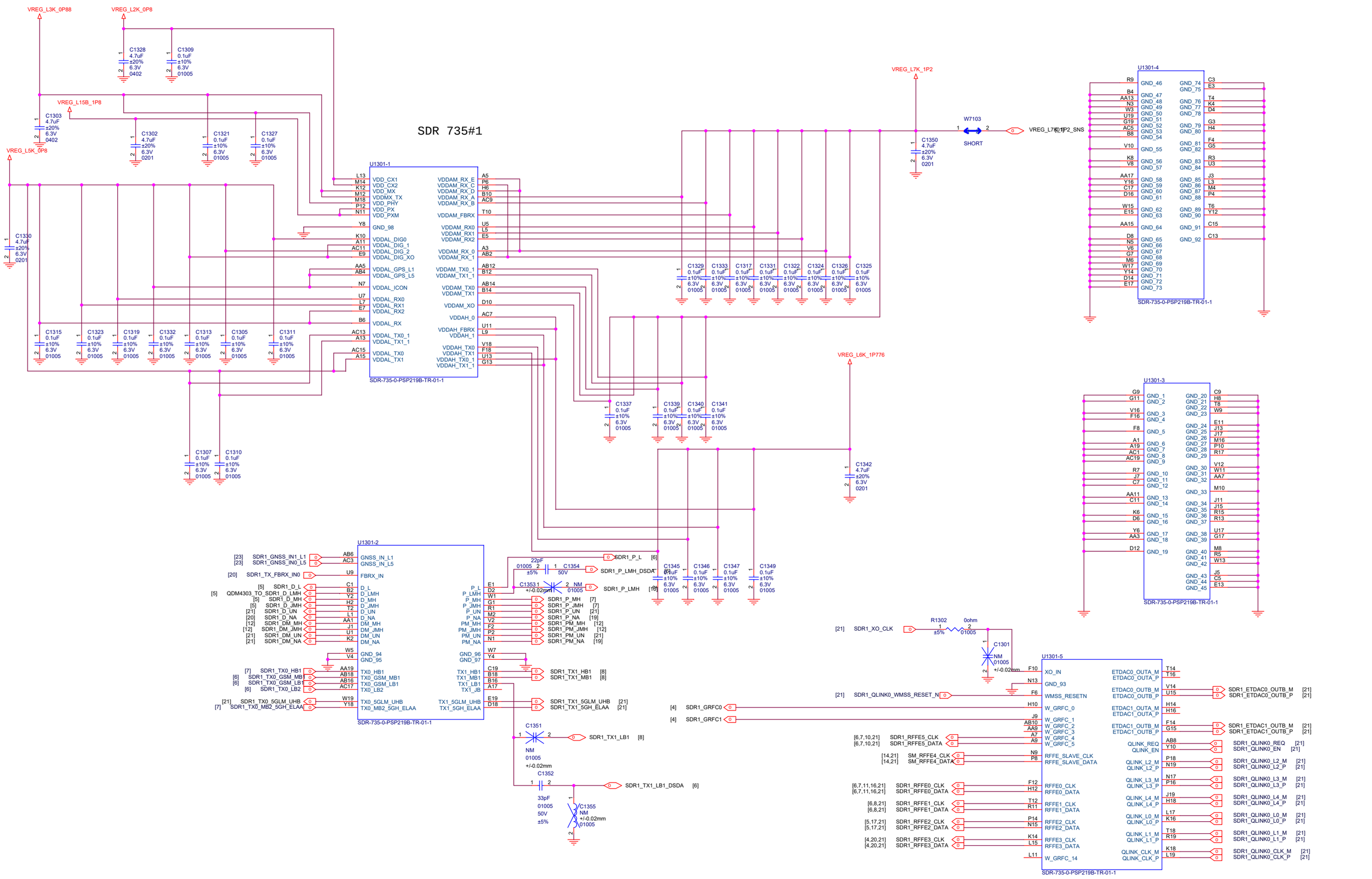

Title: L2_MAIN

Size: A2 | Document Number: WTR SDM735-1 | Rev

Date: Thursday, September 15, 2022 | Sheet 13 of 80

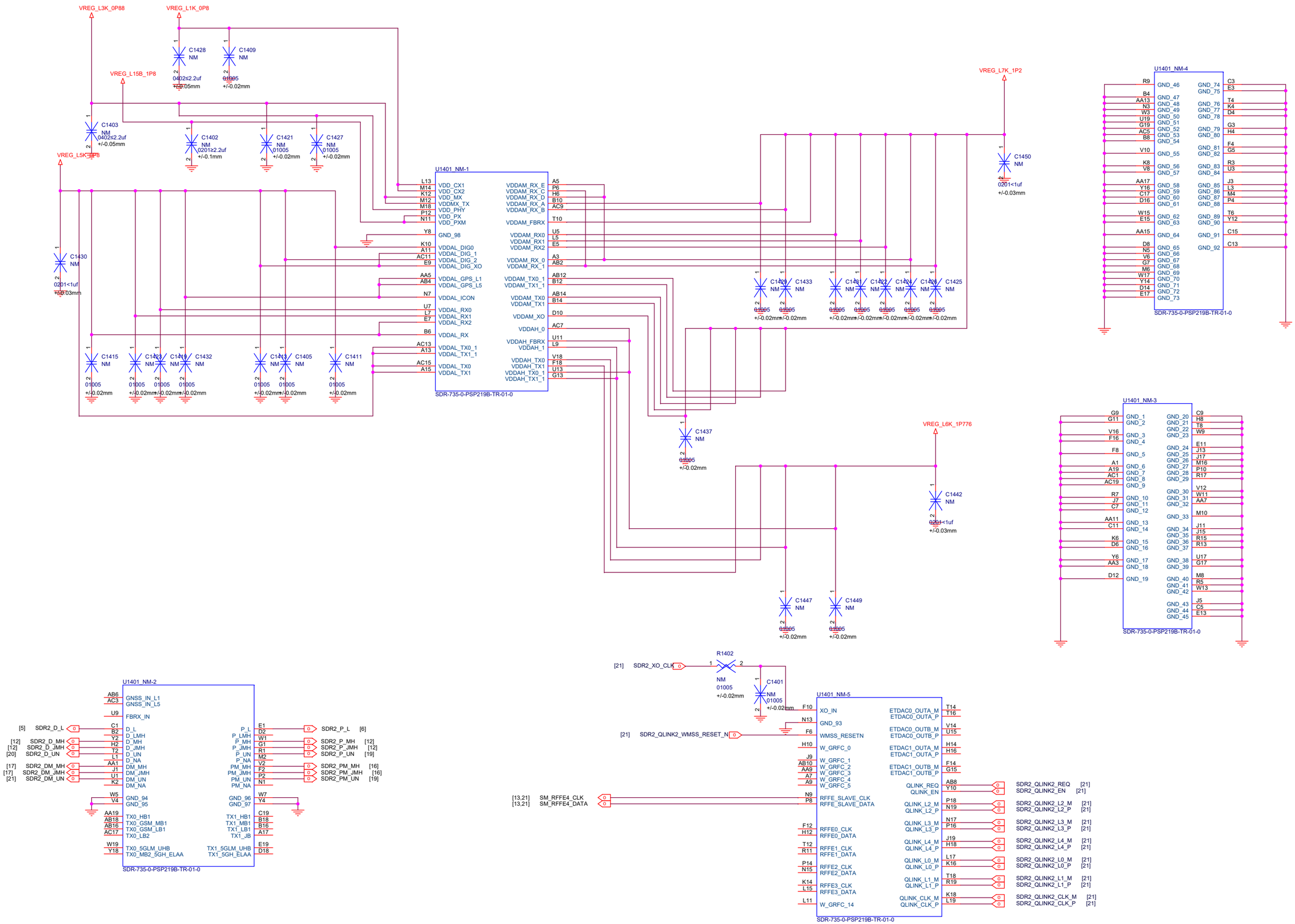

Title	L2_MAIN
Size A2	Document Number WTR SDM735-2
Rev	
Date: Thursday, June 23, 2022	Sheet

Title	L2_MAIN
Size A3	Document Number Reserved(for WTR)
Rev	
Date: Thursday, June 23, 2022	Sheet 15

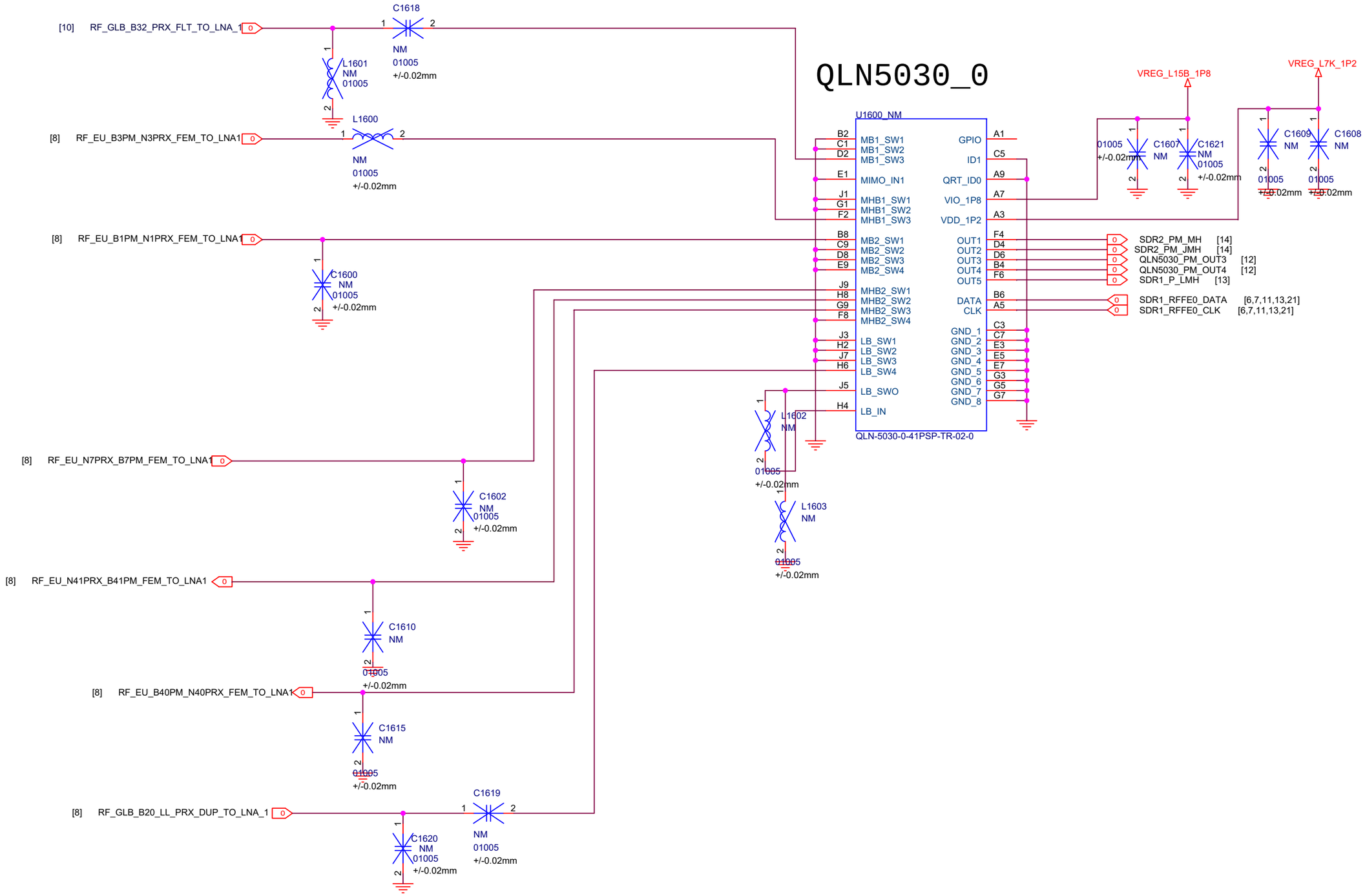

Title	L2_MAIN	
Size A3	Document Number Reserved(for 5G-sub 6G)	Rev P0
Date: Thursday, June 23, 2022	Sheet 16 of 80	

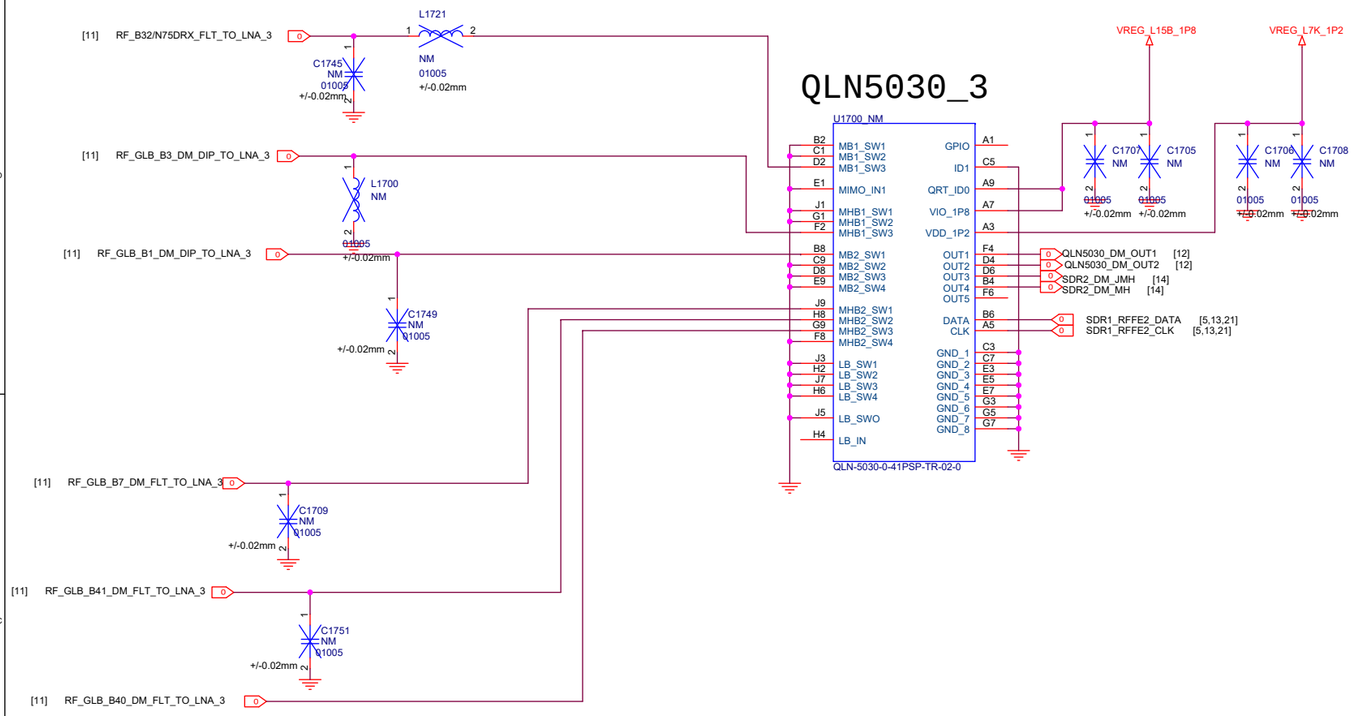

Title	L2_MAIN	
Size A2	Document Number Reserved(for MM Wave)	Rev
Date: Thursday, June 23, 2022	Sheet 17 of 80	

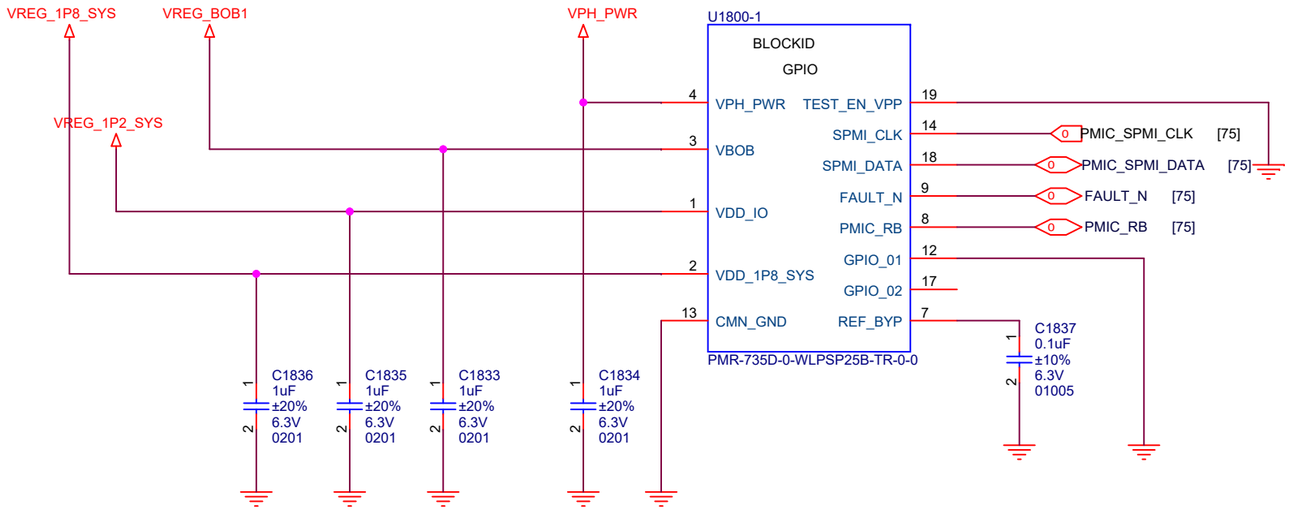

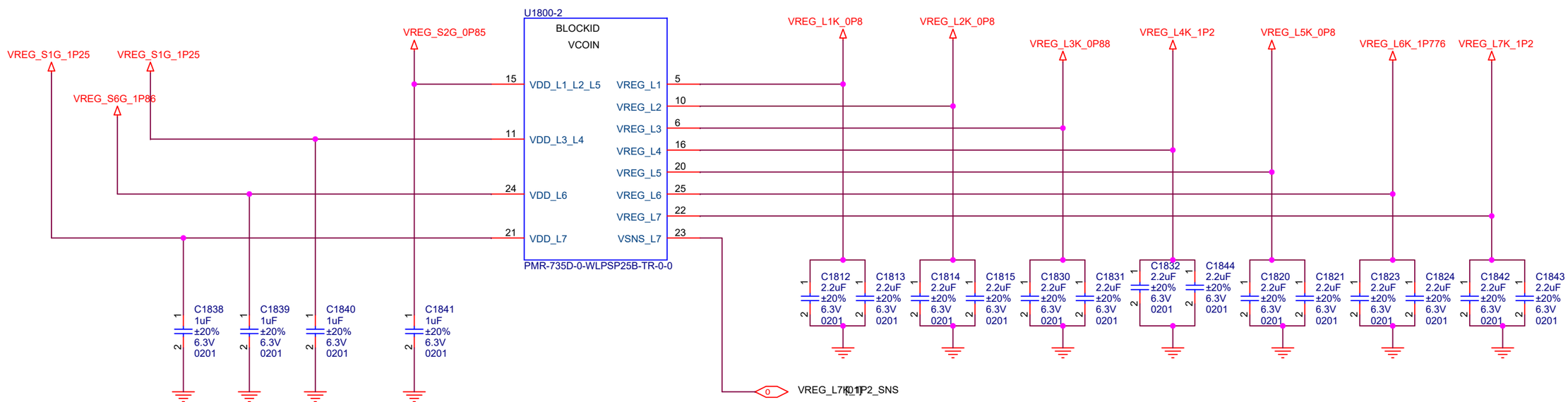

Title	M2_MAIN	
Size A3	Document Number PMR735D	Rev
Date: Thursday, June 23, 2022	Sheet 18	

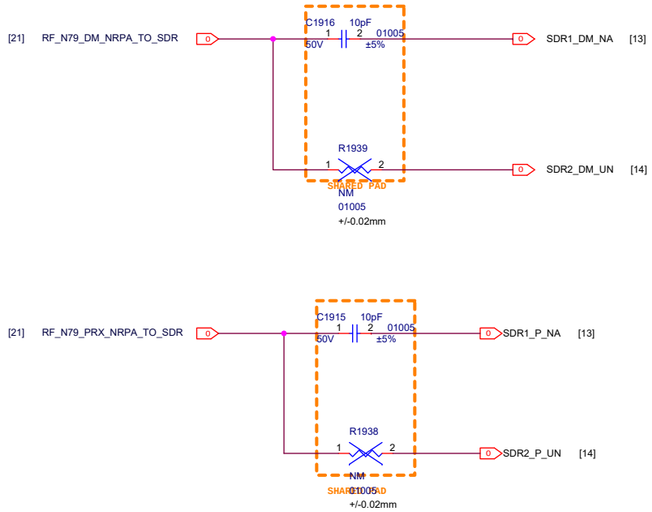

Title	L2_MAIN	
Size A2	Document Number 5G N77 N79	Rev P0
Date: Thursday, June 23, 2022	Sheet 19 of 80	

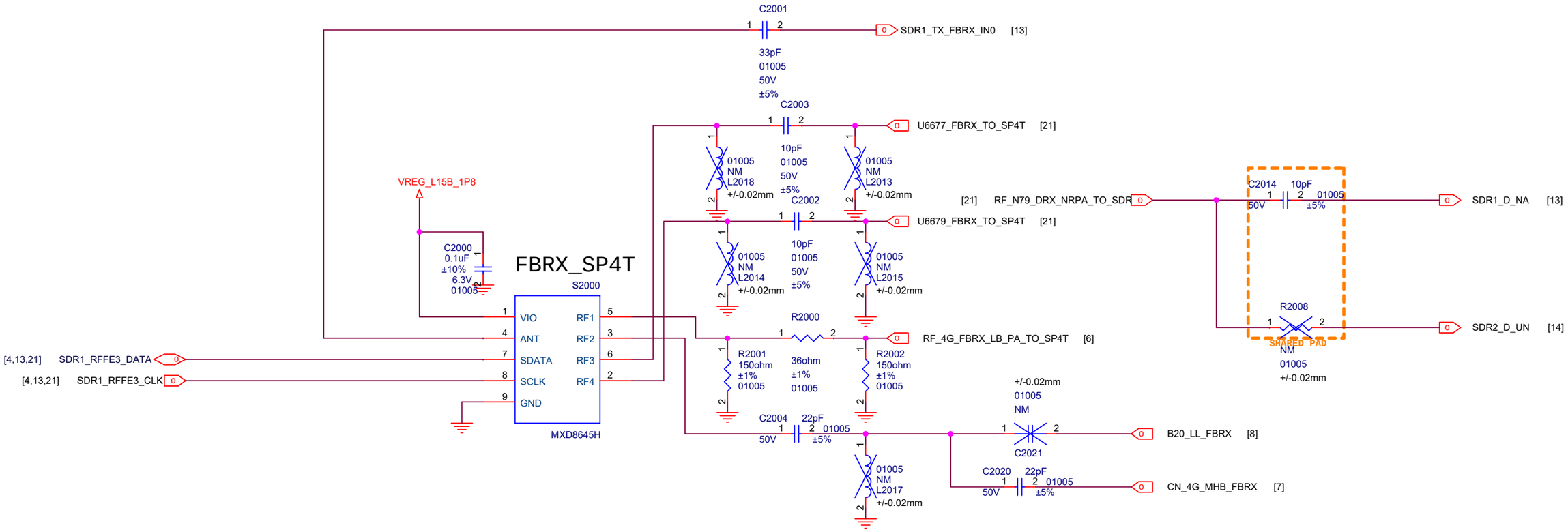

Title	L2_MAIN	
Size A3	Document Number Reserved(for 5G-sub 6G)	Rev
Date: Thursday, June 23, 2022	Sheet 20 of 80	

735D

VREG_S6G_1P86
PAD_CR0.4 TP11134
PAD_CR0.4 TP10385

VREG_S1G_1P25
PAD_CR0.4 TP11129
PAD_CR0.4 TP11130
PAD_CR0.4 TP11131

VREG_1P2_SYS
PAD_CR0.4 TP11123

VREG_S2G_0P85
PAD_CR0.4 TP11132
PAD_CR0.4 TP11133

VREG_1P8_SYS
PAD_CR0.4 TP11126

VREG_L4K_1P2
VREG_L8K_1P776
PAD_CR0.4 TP11121
PAD_CR0.4 TP11119

VREG_L7K_1P2
[8] PA_THERM0 — PAD_CR0.4 TP11057
PAD_CR0.4 TP10190
PAD_CR0.4 TP10579

DCDC

VPA_LB_QET7100_2
PAD_CR0.4 TP11068
PAD_CR0.4 TP11069
PAD_CR0.4 TP11070

VPA_APT_QET7100_2
VPA_LB_QET7100_1
PAD_CR0.4 TP10191
PAD_CR0.4 TP10193
PAD_CR0.4 TP10194
PAD_CR0.4 TP10195
PAD_CR0.4 TP10196

VPA_LB_QET7100_1_LB_PA
PAD_CR0.4 TP10302
PAD_CR0.4 TP10192

[6,7,10,13] SDR1_RFFE5_CLK — PAD_CR0.4 TP10199
[6,7,10,13] SDR1_RFFE5_DATA — PAD_CR0.4 TP10200
[13] SDR1_ETDAC0_OUTB_P — PAD_CR0.4 TP10202
[13] SDR1_ETDAC0_OUTB_M — PAD_CR0.4 TP10203
[6,8,13] SDR1_RFFE1_CLK — PAD_CR0.4 TP10204
[6,8,13] SDR1_RFFE1_DATA — PAD_CR0.4 TP10205
[13] SDR1_ETDAC1_OUTB_P — PAD_CR0.4 TP10206
[13] SDR1_ETDAC1_OUTB_M — PAD_CR0.4 TP10207

QPM6679_0

[6,7,11,13,16] SDR1_RFFE0_CLK — PAD_CR0.4 TP10208
[6,7,11,13,16] SDR1_RFFE0_DATA — PAD_CR0.4 TP10209
[13] SDR1_TX1_5GLM_UHB — PAD_CR0.4 TP10210
[13] SDR1_TX1_5GH_ELAN — PAD_CR0.4 TP10211
[13] SDR1_P_UN — PAD_CR0.4 TP10212
[13] SDR1_PM_UN — PAD_CR0.4 TP10213
[19] RF_N79_PRX_NRPA_TO_SDR — PAD_CR0.4 TP10214
[10] NR_PA_FBRX — PAD_CR0.4 TP10216
[20] U6679_FBRX_to_SP4T — PAD_CR0.4 TP10217
[19] RF_N79_DM_NRPA_TO_SDR — PAD_CR0.4 TP10581

QPM6679_1

[5,13,17] SDR1_RFFE2_CLK — PAD_CR0.4 TP10218
[5,13,17] SDR1_RFFE2_DATA — PAD_CR0.4 TP10219
[13] SDR1_TX0_5GLM_UHB — PAD_CR0.4 TP10220
[13] SDR1_DM_UN — PAD_CR0.4 TP10221
[13] SDR1_D_UN — PAD_CR0.4 TP10222
[13] SDR1_PM_NA — PAD_CR0.4 TP10223
[14] SDR2_PM_UN — PAD_CR0.4 TP10224
[20] RF_N79_DRX_NRPA_TO_SDR — PAD_CR0.4 TP10226
[20] U6677_FBRX_to_SP4T — PAD_CR0.4 TP10227

SDR1

[13] SDR1_XO_CLK — PAD_CR0.4 TP10228
[13] SDR1_QLINK0_WMSS_RESET_N — PAD_CR0.4 TP10229
[13,14] SM_RFFE4_CLK — PAD_CR0.4 TP10230
[13,14] SM_RFFE4_DATA — PAD_CR0.4 TP10231
[13] SDR1_QLINK0_REQ — PAD_CR0.4 TP10232
[13] SDR1_QLINK0_EN — PAD_CR0.4 TP10233
[13] SDR1_QLINK0_L2_M — PAD_CR0.4 TP10234
[13] SDR1_QLINK0_L2_P — PAD_CR0.4 TP10235
[13] SDR1_QLINK0_L3_M — PAD_CR0.4 TP10236
[13] SDR1_QLINK0_L3_P — PAD_CR0.4 TP10237
[13] SDR1_QLINK0_L4_M — PAD_CR0.4 TP10238
[13] SDR1_QLINK0_L4_P — PAD_CR0.4 TP10239
[13] SDR1_QLINK0_L0_M — PAD_CR0.4 TP10240
[13] SDR1_QLINK0_L0_P — PAD_CR0.4 TP10241
[13] SDR1_QLINK0_L1_M — PAD_CR0.4 TP10242
[13] SDR1_QLINK0_L1_P — PAD_CR0.4 TP10243
[13] SDR1_QLINK0_CLK_M — PAD_CR0.4 TP10244
[13] SDR1_QLINK0_CLK_P — PAD_CR0.4 TP10245

SDR2

[14] SDR2_XO_CLK — PAD_CR0.4 TP10248
[14] SDR2_QLINK2_WMSS_RESET_N — PAD_CR0.4 TP10249
[14] SDR2_QLINK2_REQ — PAD_CR0.4 TP10250
[14] SDR2_QLINK2_EN — PAD_CR0.4 TP10253
[14] SDR2_QLINK2_L0_P — PAD_CR0.4 TP10254
[14] SDR2_QLINK2_L0_M — PAD_CR0.4 TP10255
[14] SDR2_QLINK2_L1_P — PAD_CR0.4 TP10258
[14] SDR2_QLINK2_L1_M — PAD_CR0.4 TP10259
[14] SDR2_QLINK2_L2_P — PAD_CR0.4 TP10260
[14] SDR2_QLINK2_L2_M — PAD_CR0.4 TP10261
[14] SDR2_QLINK2_L3_P — PAD_CR0.4 TP10262
[14] SDR2_QLINK2_L3_M — PAD_CR0.4 TP10263
[14] SDR2_QLINK2_L4_P — PAD_CR0.4 TP10264
[14] SDR2_QLINK2_L4_M — PAD_CR0.4 TP10265
[14] SDR2_QLINK2_CLK_P — PAD_CR0.4 TP10706
[14] SDR2_QLINK2_CLK_M — PAD_CR0.4 TP10707

DRX

[11] RF_GLB_B32/N75DRX_DIP_TO_FLT — PAD_CR0.4 TP11074
[4] RF_N77_79_DRX_DIP_TO_NRPA — PAD_CR0.4 TP11075

PM

[21] RF_N79_PM_NRPA_TO_ANT12 — PAD_CR0.4 TP11135
[04] RF_N77_PM_NRPA_TO_DIP — PAD_CR0.4 TP11110

SW_GPIO

[5] SM_GRFC6_MIRB — PAD_CR0.4 TP11078

RF_BB_POWER

VPH_PWR
PAD_CR0.4 TP10733
PAD_CR0.4 TP10734
PAD_CR0.4 TP10735
PAD_CR0.4 TP10736
PAD_CR0.4 TP11046

PAD_CR0.4 TP11392
PAD_CR0.4 TP11124
PAD_CR0.4 TP11125
PAD_CR0.4 TP11127
PAD_CR0.4 TP11128
PAD_CR0.4 TP11300
PAD_CR0.4 TP11136
PAD_CR0.4 TP10580
PAD_CR0.4 TP11120
PAD_CR0.4 TP11118
PAD_CR0.4 TP11063
PAD_CR0.4 TP11064
PAD_CR0.4 TP10292
PAD_CR0.4 TP10293
PAD_CR0.4 TP10294
PAD_CR0.4 TP10296
PAD_CR0.4 TP10297
PAD_CR0.4 TP10298
PAD_CR0.4 TP10300
PAD_CR0.4 TP10303
PAD_CR0.4 TP10304
PAD_CR0.4 TP10305
PAD_CR0.4 TP10306
PAD_CR0.4 TP10307
PAD_CR0.4 TP10308
PAD_CR0.4 TP10309
PAD_CR0.4 TP10310
PAD_CR0.4 TP10311
PAD_CR0.4 TP10312
PAD_CR0.4 TP10313
PAD_CR0.4 TP10314
PAD_CR0.4 TP10315
PAD_CR0.4 TP10316
PAD_CR0.4 TP10317
PAD_CR0.4 TP10318
PAD_CR0.4 TP10319
PAD_CR0.4 TP10321
PAD_CR0.4 TP10322
PAD_CR0.4 TP10323
PAD_CR0.4 TP10324
PAD_CR0.4 TP10326
PAD_CR0.4 TP10328
PAD_CR0.4 TP10329
PAD_CR0.4 TP10330
PAD_CR0.4 TP10331
PAD_CR0.4 TP10332
PAD_CR0.4 TP10334
PAD_CR0.4 TP10335
PAD_CR0.4 TP10336
PAD_CR0.4 TP10337
PAD_CR0.4 TP10338
PAD_CR0.4 TP10339
PAD_CR0.4 TP10340
PAD_CR0.4 TP10342
PAD_CR0.4 TP10343
PAD_CR0.4 TP10344
PAD_CR0.4 TP10345
PAD_CR0.4 TP10346
PAD_CR0.4 TP10347
PAD_CR0.4 TP10349
PAD_CR0.4 TP10350
PAD_CR0.4 TP10351
PAD_CR0.4 TP10353
PAD_CR0.4 TP10354
PAD_CR0.4 TP10355
PAD_CR0.4 TP10356
PAD_CR0.4 TP10358
PAD_CR0.4 TP10360
PAD_CR0.4 TP10361
PAD_CR0.4 TP10362
PAD_CR0.4 TP10363
PAD_CR0.4 TP10364
PAD_CR0.4 TP10366
PAD_CR0.4 TP10367
PAD_CR0.4 TP10368
PAD_CR0.4 TP10369
PAD_CR0.4 TP10372
PAD_CR0.4 TP10373
PAD_CR0.4 TP10375
PAD_CR0.4 TP10376
PAD_CR0.4 TP10378
PAD_CR0.4 TP10379
PAD_CR0.4 TP10380
PAD_CR0.4 TP10381
PAD_CR0.4 TP10382
PAD_CR0.4 TP10383
PAD_CR0.4 TP10384
PAD_CR0.4 TP10386
PAD_CR0.4 TP10387
PAD_CR0.4 TP10388
PAD_CR0.4 TP10389
PAD_CR0.4 TP10390
PAD_CR0.4 TP10391
PAD_CR0.4 TP10396
PAD_CR0.4 TP10406
PAD_CR0.4 TP10411
PAD_CR0.4 TP10416
PAD_CR0.4 TP10421
PAD_CR0.4 TP10426
PAD_CR0.4 TP10431
PAD_CR0.4 TP10436
PAD_CR0.4 TP10392
PAD_CR0.4 TP10402
PAD_CR0.4 TP10407
PAD_CR0.4 TP10412
PAD_CR0.4 TP10417
PAD_CR0.4 TP10422
PAD_CR0.4 TP10427
PAD_CR0.4 TP10393
PAD_CR0.4 TP10398
PAD_CR0.4 TP10408
PAD_CR0.4 TP10413
PAD_CR0.4 TP10418
PAD_CR0.4 TP10428
PAD_CR0.4 TP10433
PAD_CR0.4 TP10438
PAD_CR0.4 TP10394
PAD_CR0.4 TP10399
PAD_CR0.4 TP10404
PAD_CR0.4 TP10409
PAD_CR0.4 TP10414
PAD_CR0.4 TP10419
PAD_CR0.4 TP10424
PAD_CR0.4 TP10429
PAD_CR0.4 TP10434
PAD_CR0.4 TP10439
PAD_CR0.4 TP10395
PAD_CR0.4 TP10400
PAD_CR0.4 TP10405
PAD_CR0.4 TP10415
PAD_CR0.4 TP10420
PAD_CR0.4 TP10425
PAD_CR0.4 TP10430
PAD_CR0.4 TP10435
PAD_CR0.4 TP10441
PAD_CR0.4 TP10446
PAD_CR0.4 TP10451
PAD_CR0.4 TP10456
PAD_CR0.4 TP10466
PAD_CR0.4 TP10471
PAD_CR0.4 TP10481
PAD_CR0.4 TP10486
PAD_CR0.4 TP10447
PAD_CR0.4 TP10462
PAD_CR0.4 TP10467
PAD_CR0.4 TP10472
PAD_CR0.4 TP10477
PAD_CR0.4 TP10487
PAD_CR0.4 TP10443
PAD_CR0.4 TP10448
PAD_CR0.4 TP10453
PAD_CR0.4 TP10463
PAD_CR0.4 TP10469
PAD_CR0.4 TP10473
PAD_CR0.4 TP10478
PAD_CR0.4 TP10483
PAD_CR0.4 TP10488
PAD_CR0.4 TP10444
PAD_CR0.4 TP10449
PAD_CR0.4 TP10459
PAD_CR0.4 TP10464
PAD_CR0.4 TP10469
PAD_CR0.4 TP10474
PAD_CR0.4 TP10479
PAD_CR0.4 TP10484
PAD_CR0.4 TP10489
PAD_CR0.4 TP10445
PAD_CR0.4 TP10450
PAD_CR0.4 TP10455
PAD_CR0.4 TP10460
PAD_CR0.4 TP10465
PAD_CR0.4 TP10470
PAD_CR0.4 TP10475
PAD_CR0.4 TP10480
PAD_CR0.4 TP10485
PAD_CR0.4 TP10491
PAD_CR0.4 TP10496
PAD_CR0.4 TP10501
PAD_CR0.4 TP10511
PAD_CR0.4 TP10516
PAD_CR0.4 TP10521
PAD_CR0.4 TP10526
PAD_CR0.4 TP10531
PAD_CR0.4 TP10536
PAD_CR0.4 TP10497
PAD_CR0.4 TP10502
PAD_CR0.4 TP10507
PAD_CR0.4 TP10512
PAD_CR0.4 TP10527
PAD_CR0.4 TP10532
PAD_CR0.4 TP10537
PAD_CR0.4 TP10513
PAD_CR0.4 TP10518
PAD_CR0.4 TP10523
PAD_CR0.4 TP10528
PAD_CR0.4 TP10533
PAD_CR0.4 TP10538
PAD_CR0.4 TP10494
PAD_CR0.4 TP10499
PAD_CR0.4 TP10504
PAD_CR0.4 TP10510
PAD_CR0.4 TP10514
PAD_CR0.4 TP10519
PAD_CR0.4 TP10524
PAD_CR0.4 TP10529
PAD_CR0.4 TP10534
PAD_CR0.4 TP10539
PAD_CR0.4 TP10495
PAD_CR0.4 TP10505
PAD_CR0.4 TP10510
PAD_CR0.4 TP10515
PAD_CR0.4 TP10520
PAD_CR0.4 TP10525
PAD_CR0.4 TP10530
PAD_CR0.4 TP11061
PAD_CR0.4 TP11062
PAD_CR0.4 TP10602
PAD_CR0.4 TP10607
PAD_CR0.4 TP10617
PAD_CR0.4 TP10627
PAD_CR0.4 TP10632
PAD_CR0.4 TP10637
PAD_CR0.4 TP10593
PAD_CR0.4 TP10598
PAD_CR0.4 TP10603
PAD_CR0.4 TP10608
PAD_CR0.4 TP10613
PAD_CR0.4 TP10618
PAD_CR0.4 TP10623
PAD_CR0.4 TP10628
PAD_CR0.4 TP10633
PAD_CR0.4 TP10638
PAD_CR0.4 TP10599
PAD_CR0.4 TP10604
PAD_CR0.4 TP10614
PAD_CR0.4 TP10624
PAD_CR0.4 TP10629
PAD_CR0.4 TP10634
PAD_CR0.4 TP10595
PAD_CR0.4 TP10600
PAD_CR0.4 TP10605
PAD_CR0.4 TP10610
PAD_CR0.4 TP10615
PAD_CR0.4 TP10625
PAD_CR0.4 TP10630
PAD_CR0.4 TP10635
PAD_CR0.4 TP10640
PAD_CR0.4 TP10596
PAD_CR0.4 TP10601
PAD_CR0.4 TP10606
PAD_CR0.4 TP10611
PAD_CR0.4 TP10616
PAD_CR0.4 TP10621
PAD_CR0.4 TP10626
PAD_CR0.4 TP10631
PAD_CR0.4 TP10641

NFC+GPS

[23] SDR_GNSS_IN0_L5 — PAD_CR0.4 TP11044
[23] SDR_GNSS_IN1_L1 — PAD_CR0.4 TP11045
[22] NFC_RF_P — PAD_CR0.4 TP11092
[22] NFC_RF_N — PAD_CR0.4 TP11093
[21] NFC_RXP_2 — PAD_CR0.4 TP11393
[21] NFC_RXP_1 — PAD_CR0.4 TP11394

Title	L2_MAIN	
Size A1	Document Number 4G FRONT END	Rev
Date: Thursday, June 23, 2022	Sheet 21	

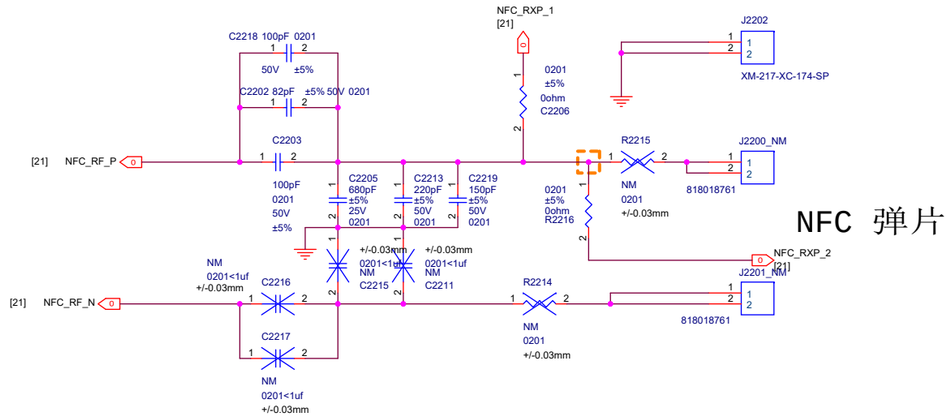

NFC 弹片

Title	M2_MAIN	
Size A2	Document Number ANT1	Rev
Date: Monday, June 27, 2022	Sheet 22 of 76	

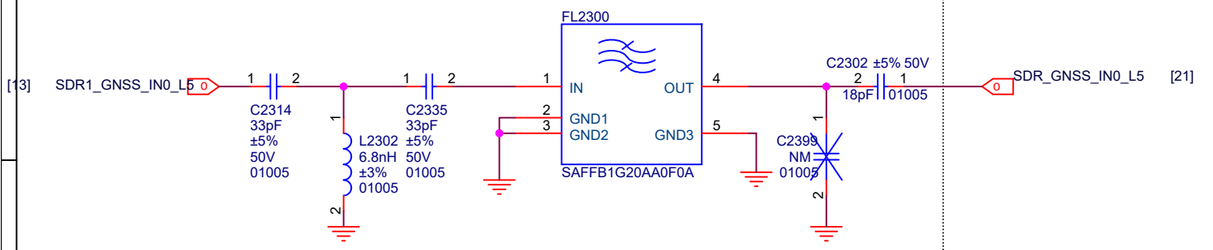

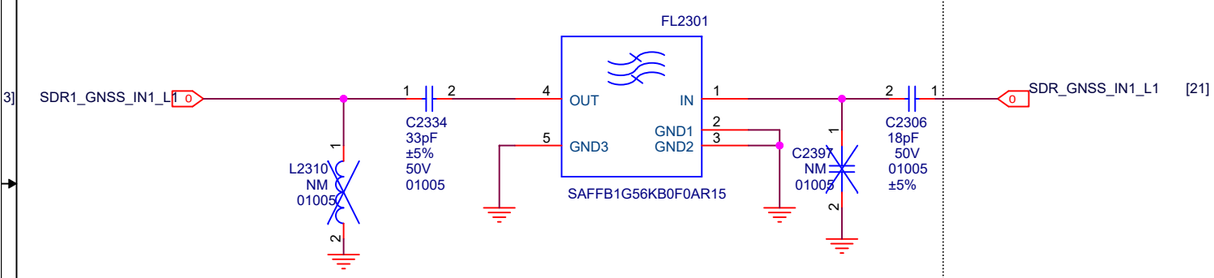

Close2WTR

Title	M2_MAIN	
Size A3	Document Number ANT1	Rev P0
Date: Thursday, June 23, 2022	Sheet 23 of 76	

TOF&Flicker&FLASH&MIC

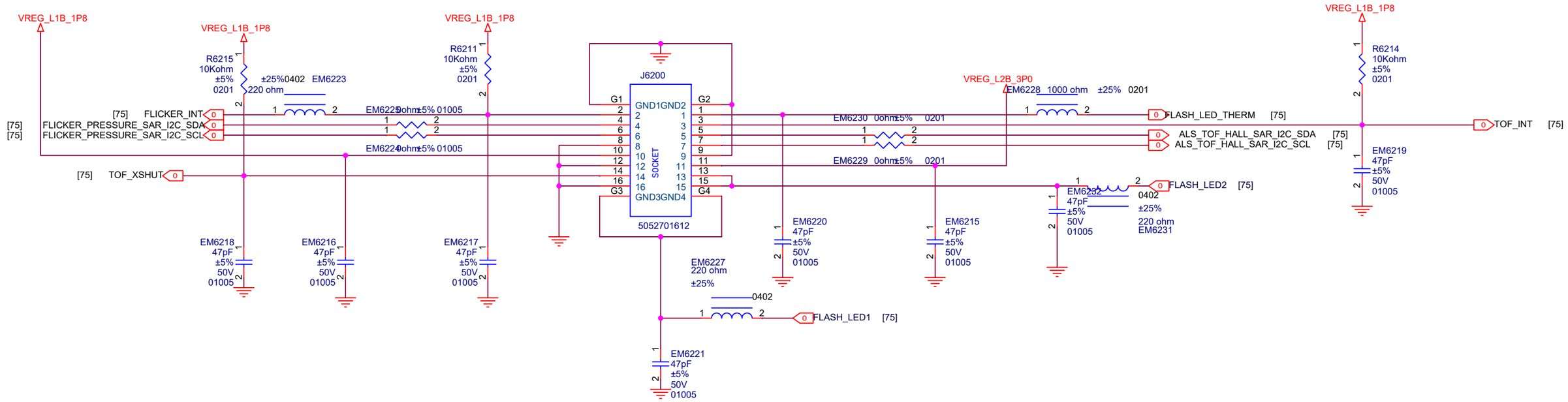

Title	L2_MAIN	
Size A3	Document Number SENSOR-2	Rev
Date: Thursday, September 15, 2022	Sheet 62 of 79	

Title	L2_MAIN
Size A3	Document Number BTB
Rev	
Date: Thursday, June 23, 2022	Sheet 65

Title	L2_MAIN		
Size A3	Document Number FRONT CAMERA		Rev
Date: Thursday, June 23, 2022		Sheet 66 of 79	

WIDE_50M-IMX989

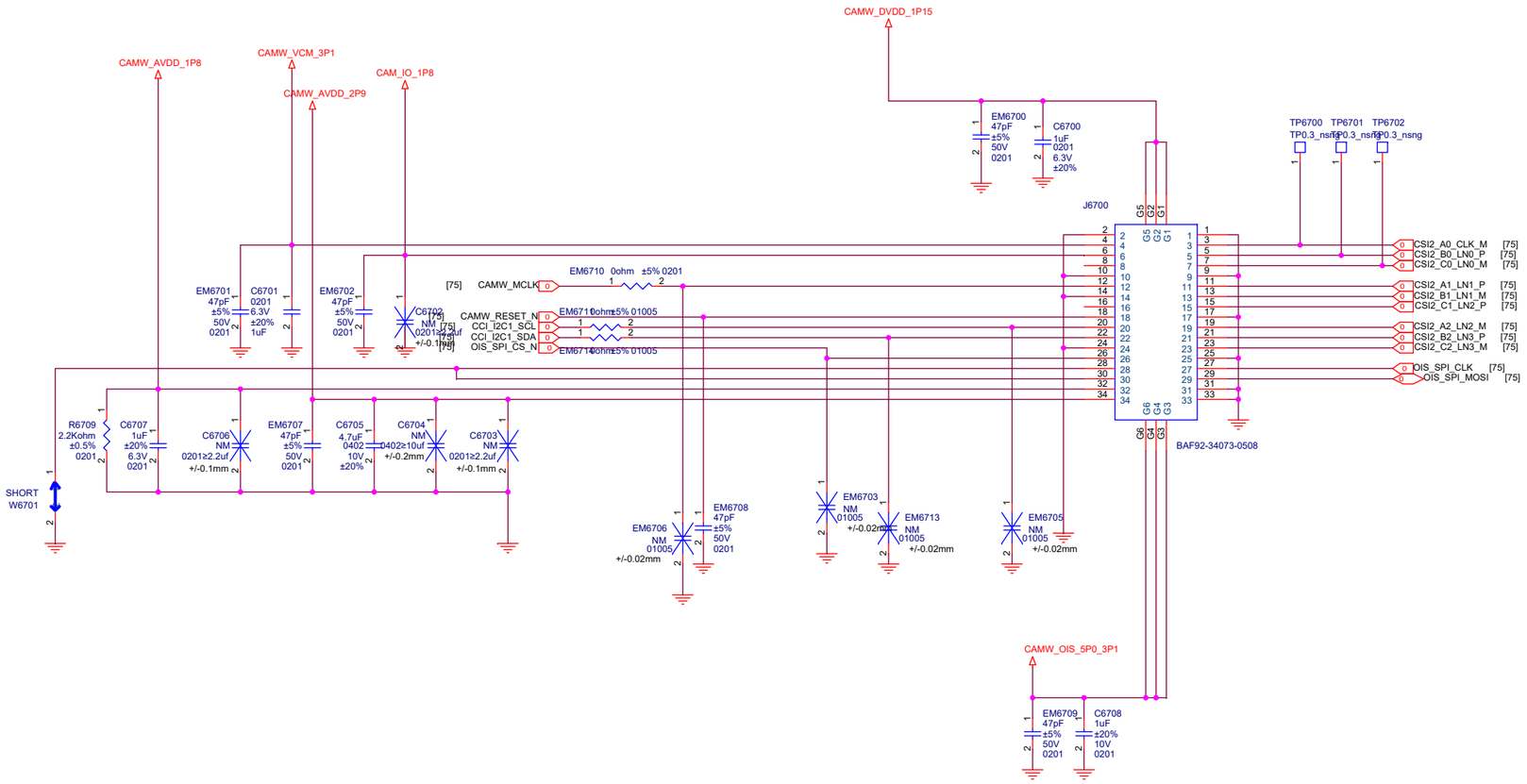

Title	L2_MAIN	
Size A2	Document Number WIDE&TELE CAMERA	Rev
Date: Thursday, September 15, 2022	Sheet 67 of 79	

ULTRA_50M-JN1

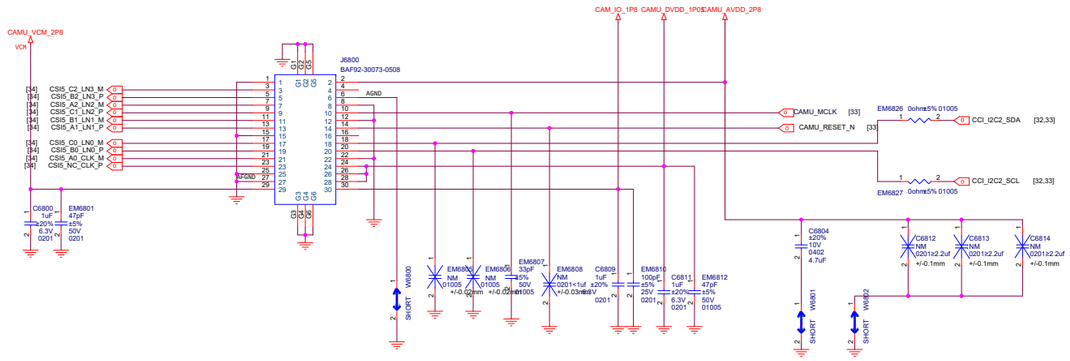

Title	L2_MAIN	
Size A1	Document Number ULTRA CAMERA	Rev
Date: Thursday, September 15, 2022	Sheet 68	79

AVDD1

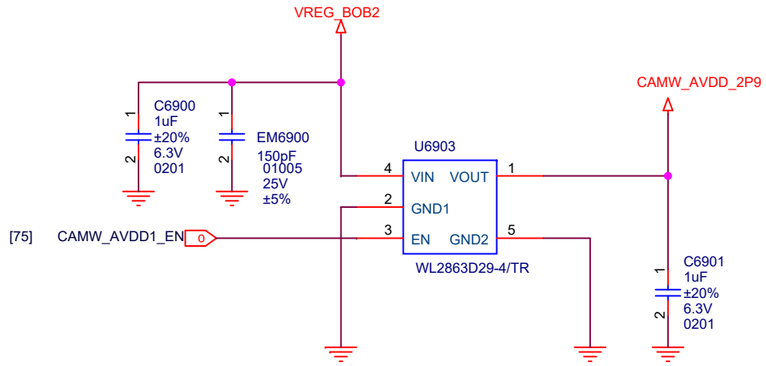

AVDD2

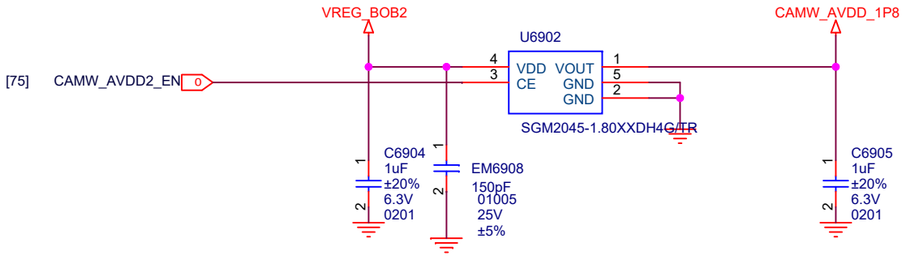

ULTRA_50M-JN1

ULTRA AVDD

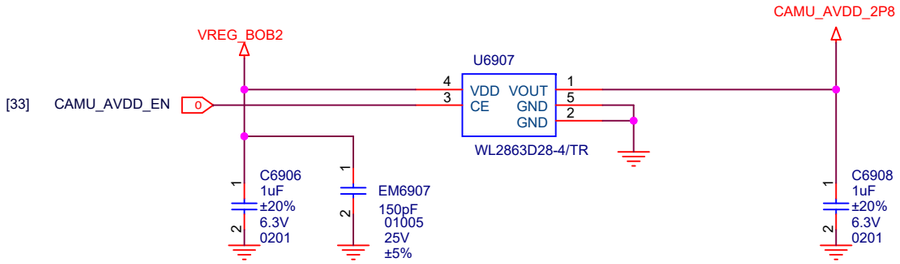

Title	M2_MAIN	
Size A3	Document Number ANT1	Rev
Date: Thursday, June 23, 2022	Sheet 69 of 76	

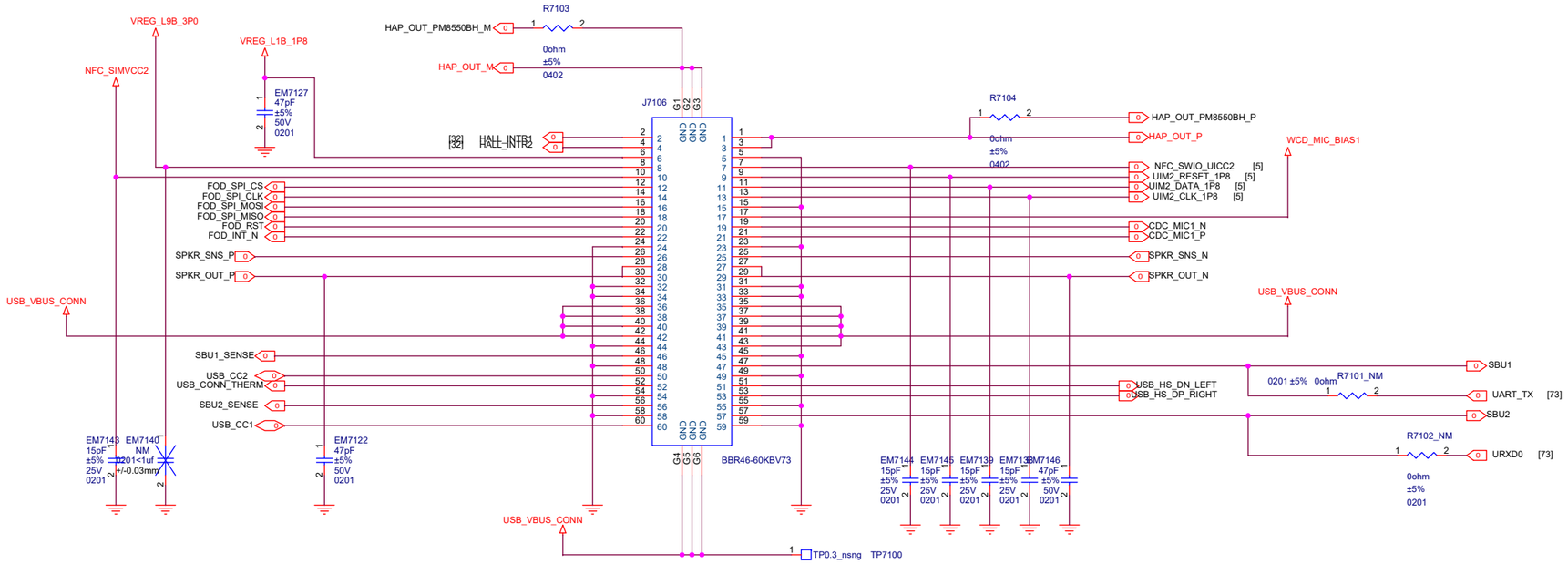

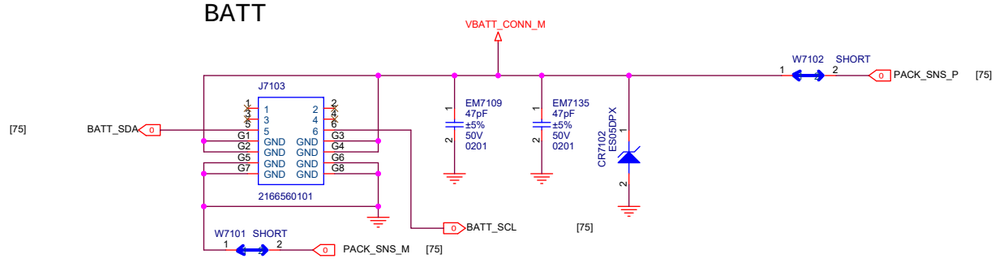

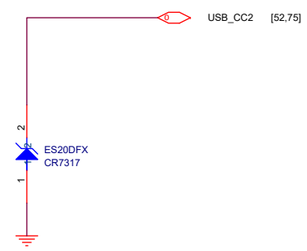

Title	L2_MAIN	
Size A2	Document Number BTB	Rev
Date: Friday, September 16, 2022	Sheet 71 of	

wireless clip

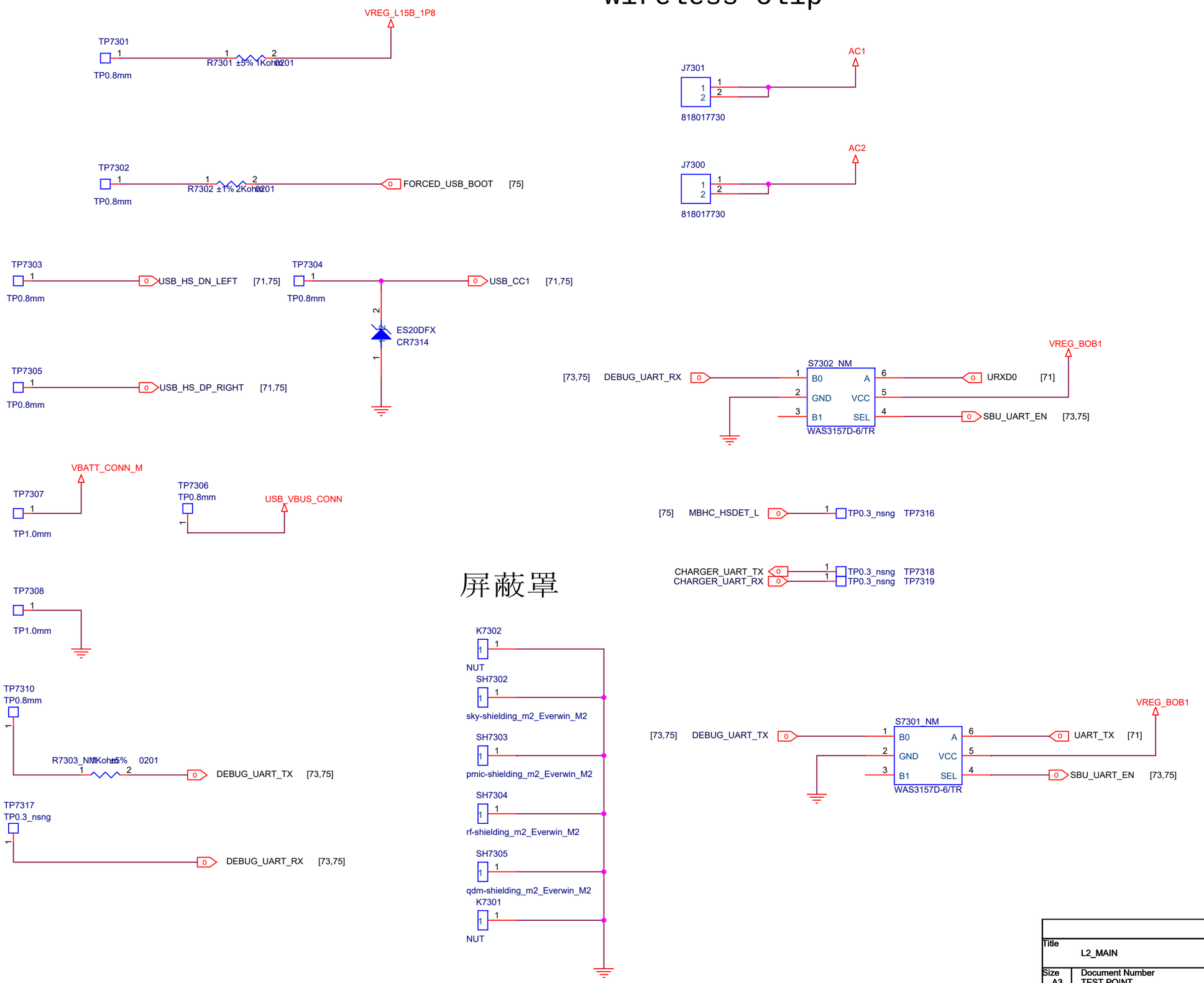

Title	L2_MAIN	
Size A3	Document Number TEST POINT	Rev
Date: Friday, September 16, 2022	Sheet 73 of 79	

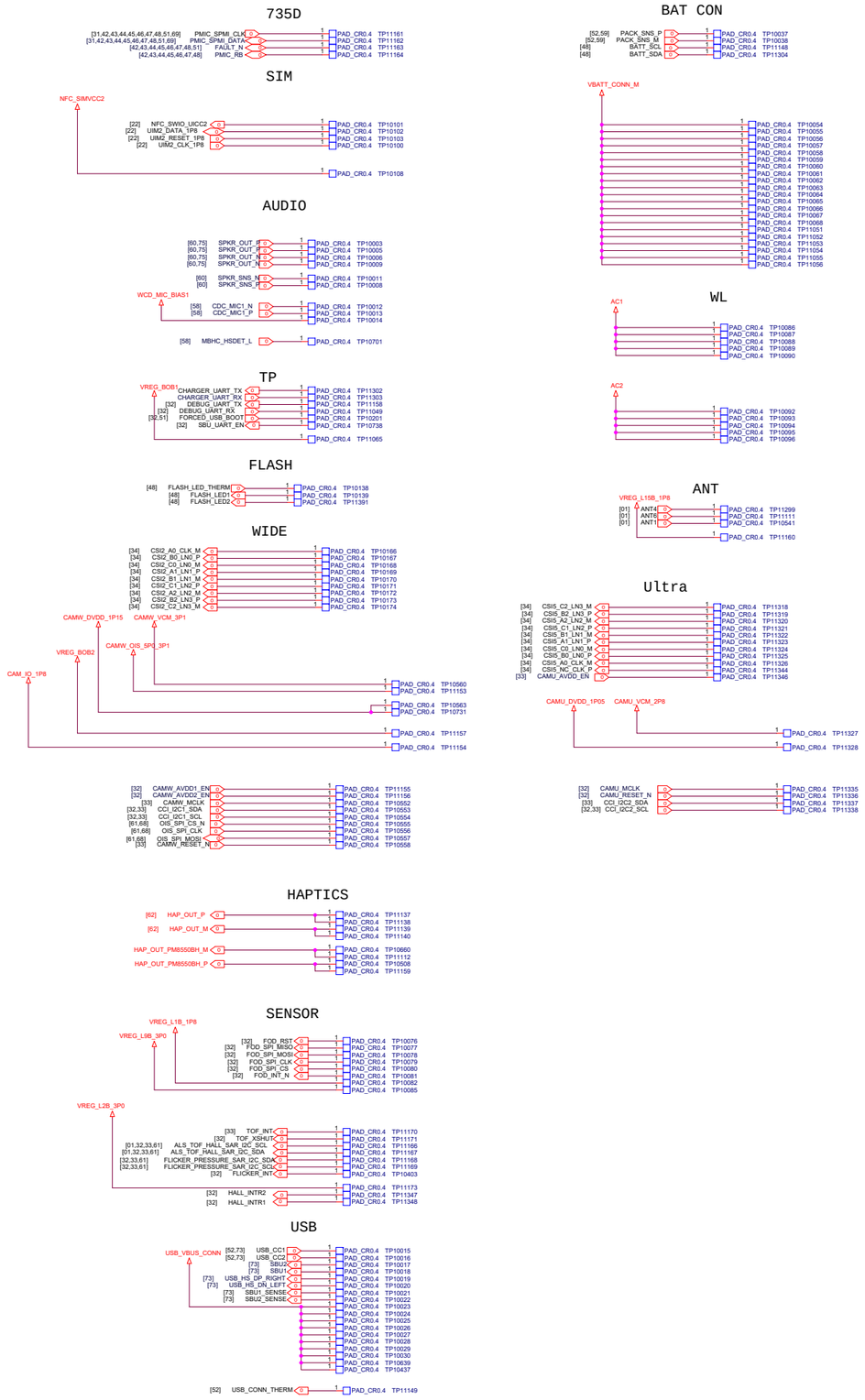

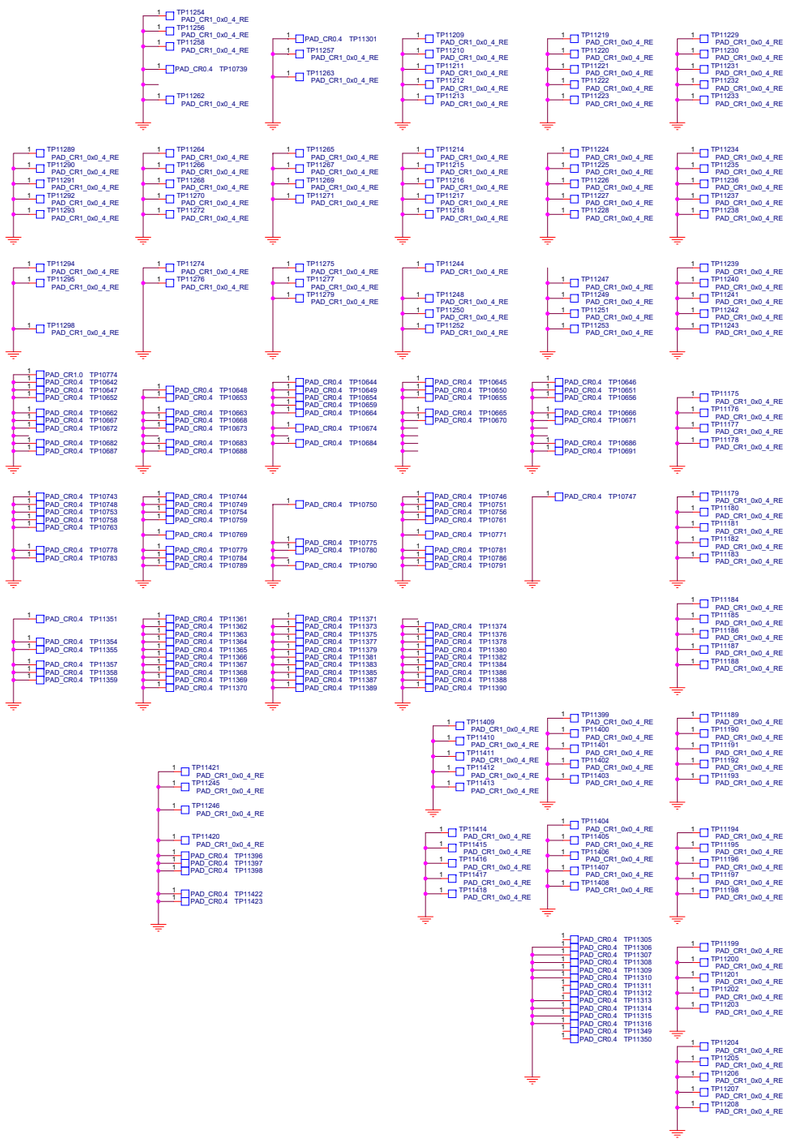

Title	L2_MAIN
Size A1	Document Number INTERPOSER PIN
Rev	
Date: Monday, July 25, 2022	Sheet 75 of 79